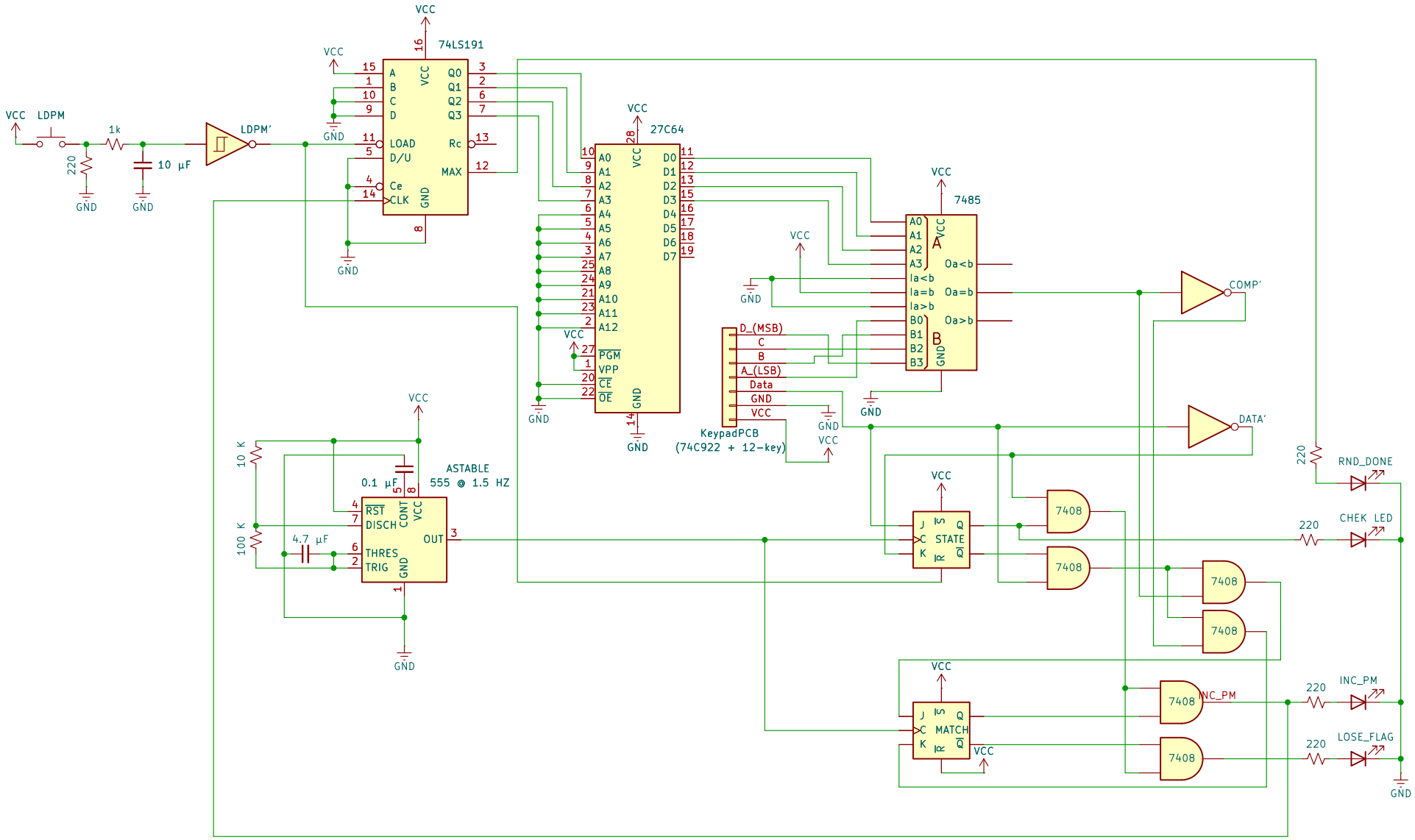
VCC
LDPM
1k
220
10 µF
GND
LDPM'
74LS191
A
B
C
D
LOAD
D/U
Ce
CLK
Q0
Q1
Q2
Q3
Rc
MAX
27C64
A0
A1
A2
A3
A4
A5
A6
A7
A8
A9
A10
A11
A12
PGM
VPP
CE
OE
D0
D1
D2
D3
D4
D5
D6
D7
7485
A
B
Oa<b
Oa=b
Oa>b
Ia<b
Ia=b
Ia>b
D_(MSB)
C
B
A_(LSB)
Data
KeypadPCB
(74C922 + 12-key)
COMP'
DATA'
RND_DONE
CHEK LED
INC_PM
LOSE_FLAG
ASTABLE
555 @ 1.5 HZ
0.1 µF
4.7 µF
10 K
100 K
RST
DISCH
THRES
TRIG
CONT
OUT
STATE
MATCH
7408